ROTARY AIRLOCK

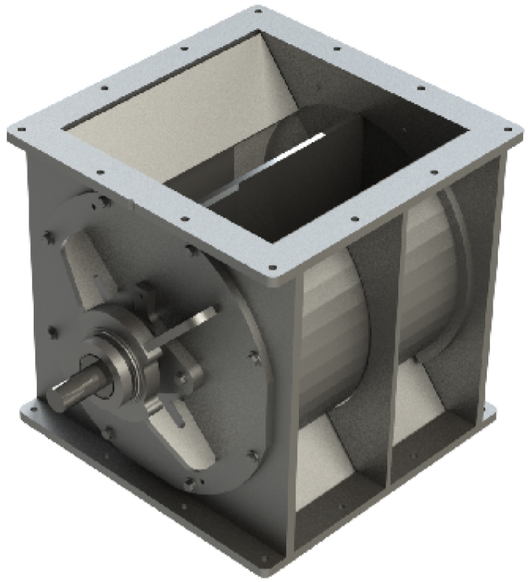

INLET VIEW

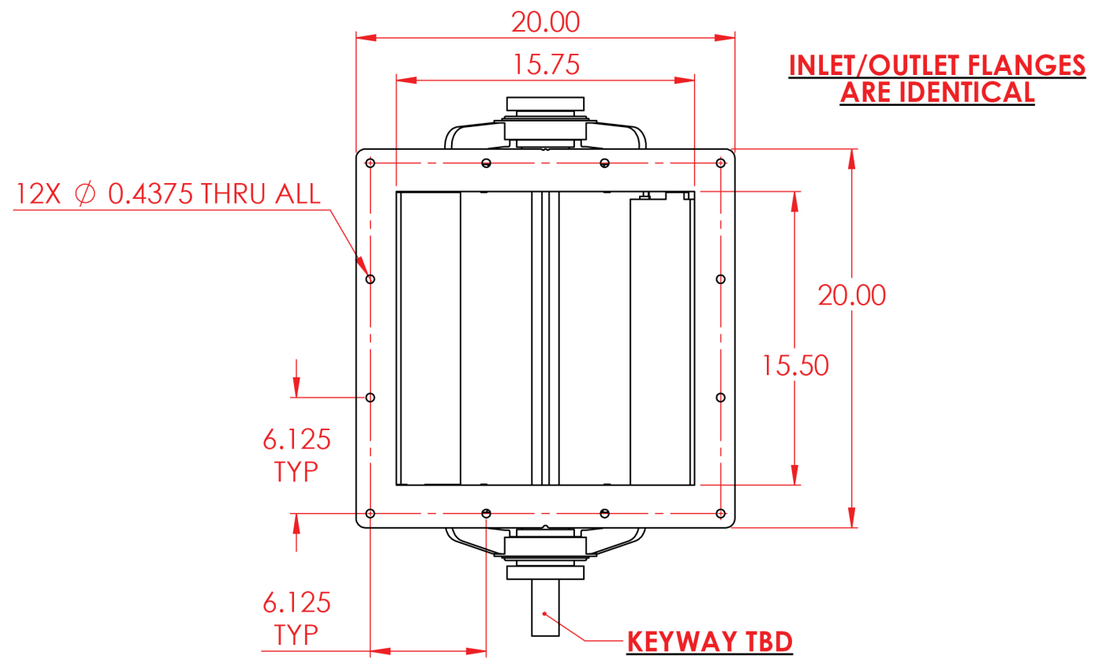

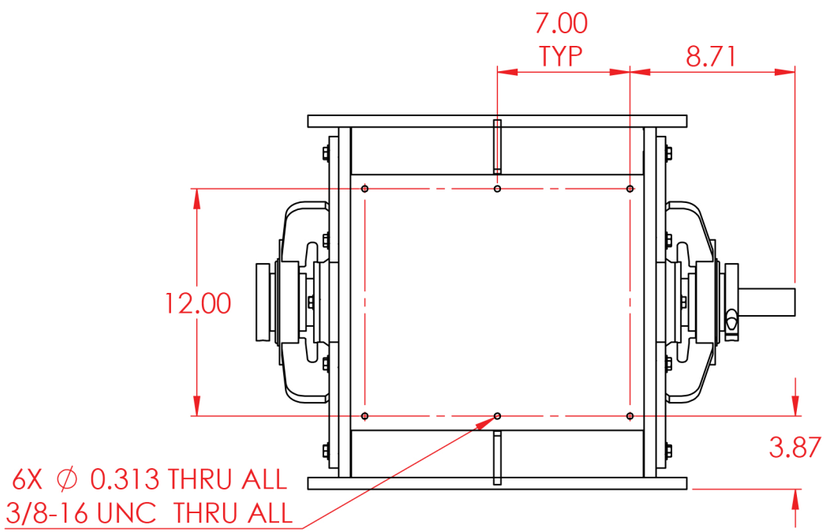

DRIVE VIEW

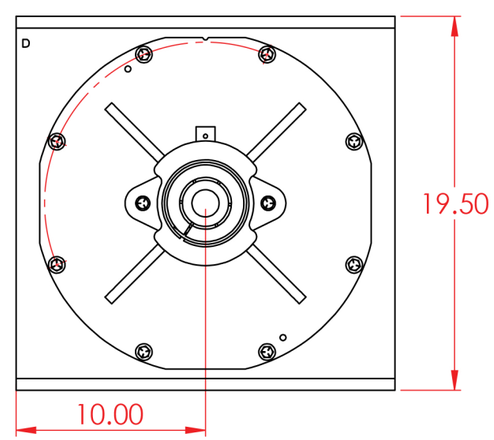

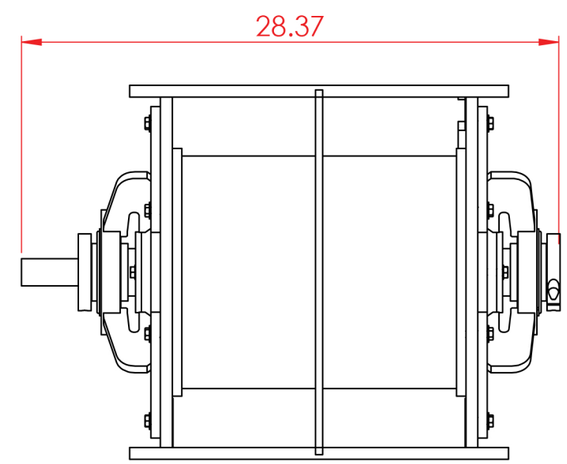

ROTARY AIRLOCK

KYLE HERREN
DIRECT LINE: (815) 564-1717
ROTARY AIRLOCK: (800) 883-8955
KHERREN@ROTARYAIRLOCK.COM

SDO-75

139

www.RotaryAirlock.com